UNIVERSITY OF CAMBRIDGE INTERNATIONAL EXAMINATIONS
International General Certificate of Secondary Education

CANDIDATE NAME	

CENTRE NUMBER						CANDIDATE NUMBER					

2512877189

PHYSICS **0625/21**

Paper 2 Core **October/November 2010**

1 hour 15 minutes

Candidates answer on the Question Paper.

No Additional Materials are required.

READ THESE INSTRUCTIONS FIRST

Write your Centre number, candidate number and name on all the work you hand in.
Write in dark blue or black pen.
You may use a soft pencil for any diagrams, graphs or rough working.
Do not use staples, paper clips, highlighters, glue or correction fluid.
DO **NOT** WRITE IN ANY BARCODES.

Answer **all** questions.
You may lose marks if you do not show your working or if you do not use appropriate units.
Take the weight of 1 kg to be 10 N (i.e. acceleration of free fall = 10 m / s^2).

At the end of the examination, fasten all your work securely together.
The number of marks is given in brackets [ ] at the end of each question or part question.

This document consists of **16** printed pages and **4** blank pages.

DC (NF/SW) 24995/3
© UCLES 2010

UNIVERSITY of CAMBRIDGE International Examinations

[Turn over

www.root19.com +91 - 9969 353 391

1 **(a)** **(i)** Figs. 1.1 and 1.2 show the dimensions of a rectangular block being measured using a ruler. They are not shown full size.

Use the scales shown to find the length and the width of the block, giving your answers in cm.

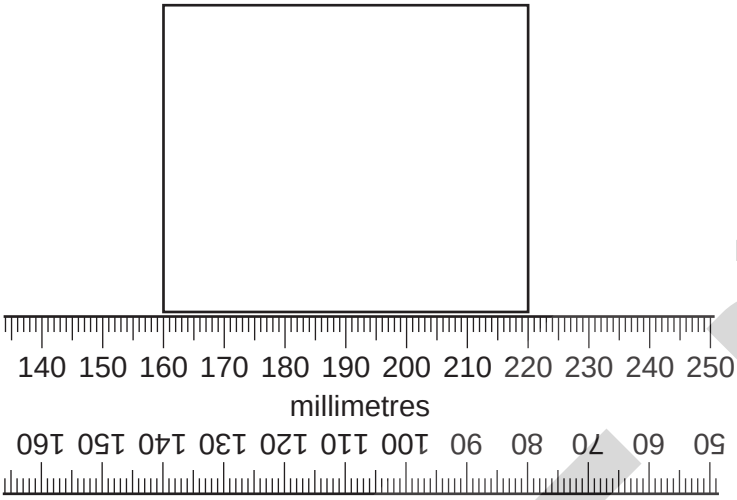

length of block ..... cm [1]

Fig. 1.1

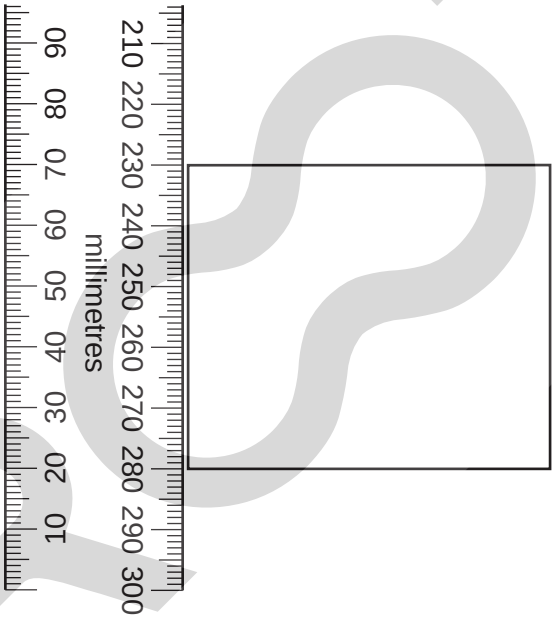

width of block ..... cm [1]

Fig. 1.2

(ii) When the block was made, it was cut from a piece of metal 2.0 cm thick.

Calculate the volume of the block.

volume = ... cm^3 [2]

www.root19.com +91 - 9969 353 391

(b) **Another** block has a volume of 20 cm^3.

Fig. 1.3 shows the reading when the block is placed on a balance.

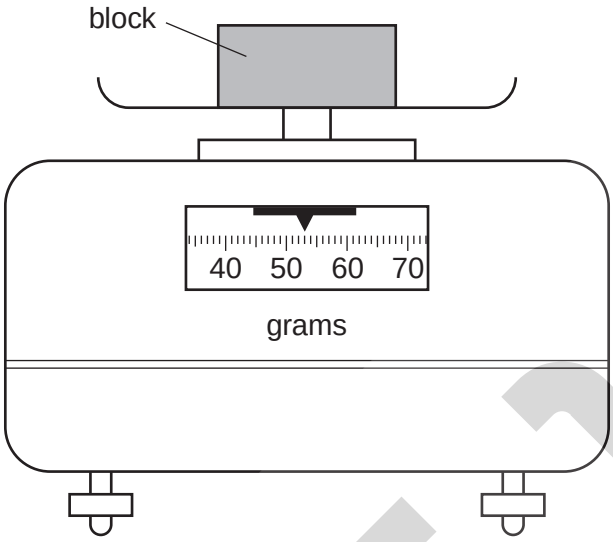

Fig. 1.3

Find the density of this block.

density = ... [4]

[Total: 8]

www.root19.com +91 - 9969 353 301

2 A boy cycles a distance of 960 m from home to school in 8.0 minutes.

(a) Calculate his average speed for the journey.

average speed = ... [4]

(b) The journey is all along a horizontal road. At the end of the journey the boy is tired because of the work he has done.

Against which force has this work been done?

..... [1]

[Total: 5]

3 **(a)** Name three different energy resources used to obtain energy directly from water (not steam).

1. .....

2. .....

3. ..... [3]

(b) Choose one of the energy resources you have named in **(a)** and write a **brief** description of how the energy is converted to electrical energy.

Which energy resource are you describing? .....

description .....

.....

.....

.....

.....

..... [3]

[Total: 6]

© UCLES 2010
www.root19.com

+91 - 9969 353 391

4 Fig. 4.1 shows four parallel rays of light reaching a thin converging lens. Point F is a principal focus of the lens.

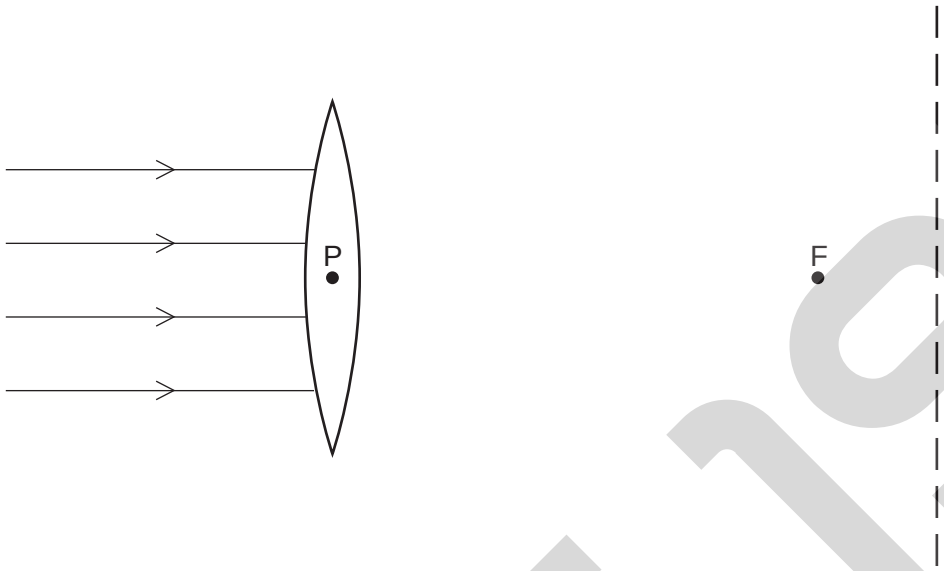

Fig. 4.1

(a) What name do we give to the distance PF? ..... [1]

(b) On Fig. 4.1, carefully draw the paths of the rays through the lens and into the air as far as the broken line. [2]

(c) A flat white screen is placed at F, parallel to the broken line.

Describe what is seen on the screen.

.....

..... [1]

(d) The screen is moved so that it is along the broken line.

Describe what is now seen on the screen.

.....

..... [1]

[Total: 5]

© UCLES 2010
www.root19.com

+91 - 9969 353 301

5 Here is a list of different types of radiation.

alpha (α), beta (β), gamma (γ), infra-red, radio, ultra-violet, visible, X-rays

(a) Underline all those radiations in the list which are **not** electromagnetic radiations. [2]

(b) Which radiation is the most penetrating? ..... [1]

(c) Which radiation has the longest wavelength? ..... [1]

(d) Which radiation consists of particles that are the same as ^{4}He nuclei? ..... [1]

[Total: 5]

6 Fig. 6.1 shows two experiments to investigate energy transfer in water.

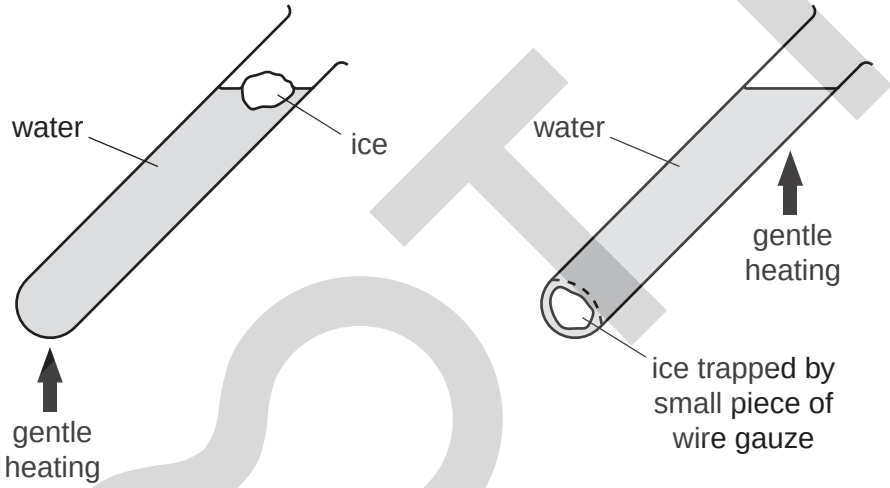

Experiment 1
Cold water is gently heated at the bottom. The ice at the top melts before the water boils.

Experiment 2
Cold water is gently heated at the top. The ice trapped at the bottom remains solid, even when the water at the top begins to boil.

Fig. 6.1

(a) Name the process by which thermal (heat) energy travels through the glass.

..... [1]

(b) **(i)** Name the principal process in Experiment 1 which takes the energy from the water at the bottom to the ice at the top.

..... [1]

www.root19.com +91 - 9969 353 391

(ii) Describe how the process in **(b)(i)** occurs.

.....

.....

.....

.....

..... [2]

(c) Suggest two reasons why the ice in Experiment 2 does not melt, even when the water at the top begins to boil.

1. .....

.....

2. .....

..... [2]

[Total: 6]

© UCLES 2010
www.root19.com

+91 - 9969 353 301

BLANK PAGE

© UCLES 2010
www.root19.com

+91 - 9969 353 391

7 **(a)** In Fig. 7.1, a ray of light is shown passing into water from air. The angle of the refracted ray to the normal is 40°.

On Fig. 7.1, mark clearly the angle of incidence *i*. [1]

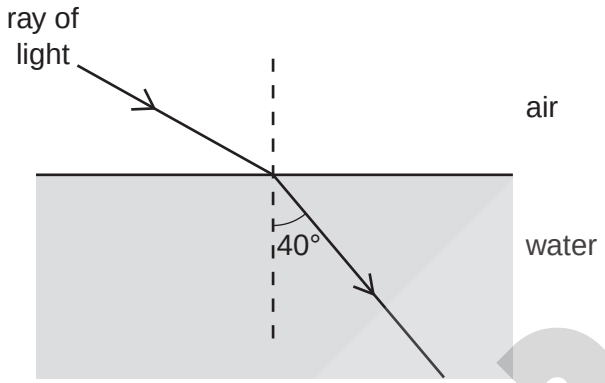

Fig. 7.1

(b) In Fig. 7.2, a ray of light is shown in water and reaching the surface with the air at an angle of 40° to the normal.

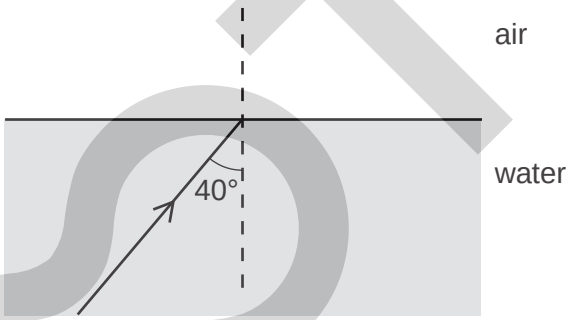

Fig. 7.2

(i) On Fig. 7.2, draw accurately the path of the ray in the air. [2]

(ii) The angle in the water in Fig. 7.2 is increased from 40° to 70°, and the ray no longer emerges into the air.

State what happens to the ray at the surface and explain why this happens.

.....

.....

.....

..... [2]

[Total: 5]

www.root19.com +91 - 9969 3[illegible]

8 Fig. 8.1 shows a workman hammering a metal post into the ground. Some distance away is a vertical cliff.

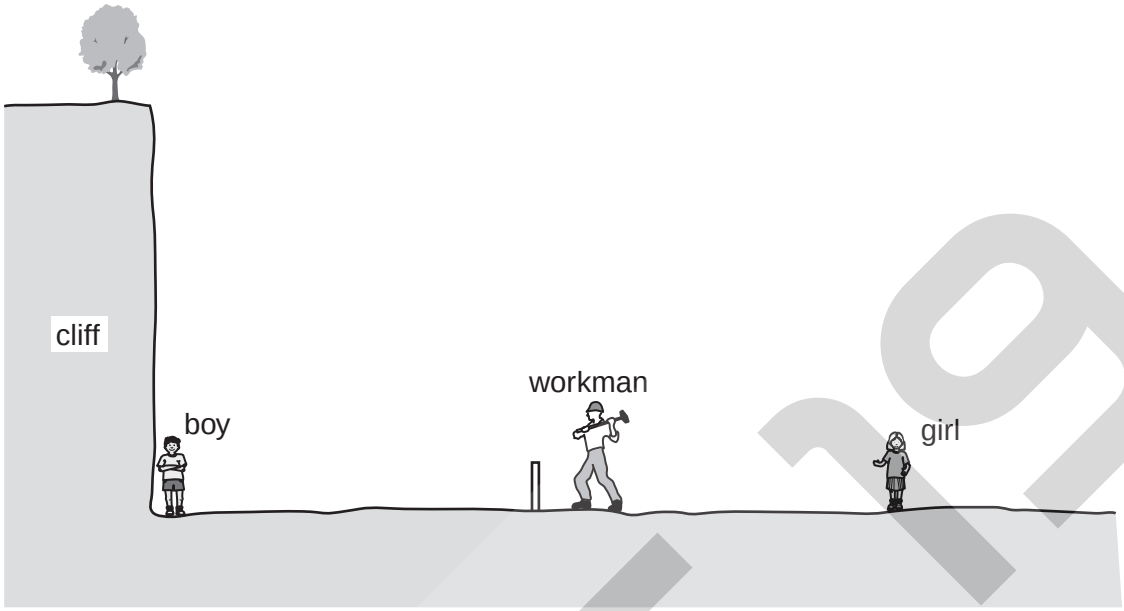

Fig. 8.1

(a) A boy is standing at the foot of the cliff. The speed of sound in air is 330 m / s. It takes 1.5 s for the sound of the hammer hitting the post to reach the boy.

(i) What does the boy hear after he sees each strike of the hammer on the post?

..... [1]

(ii) Calculate the distance between the post and the boy.

distance = ... m [3]

(b) A girl is also watching the workman. She is standing the same distance behind the post as the boy is in front of it. She hears two separate sounds after each strike of the hammer on the post.

(i) Why does she hear **two** sounds?

.....

.....

..... [2]

© UCLES 2010
www.root19.com

+91 - 9969 353 391

(ii) How long after the hammer strike does the girl hear each of these sounds?

girl hears first sound after ..... s

girl hears second sound after ..... s [2]

[Total: 8]

© UCLES 2010
www.root19.com

+91 - 9969 353 301

9 **(a)** Fig. 9.1 shows the magnetic field pattern around a single bar magnet.

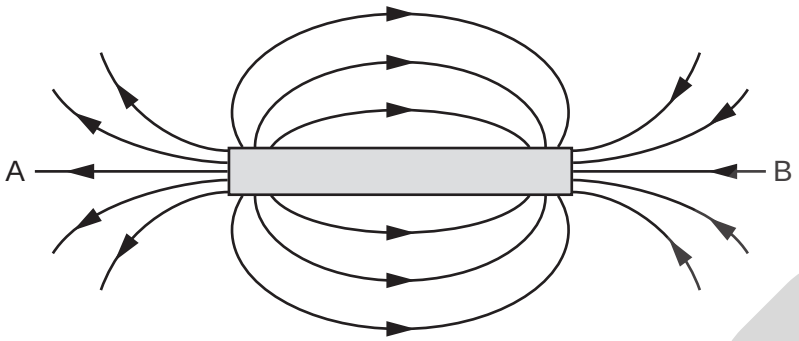

Fig. 9.1

(i) On Fig. 9.1, mark the north and south poles of the magnet, using the letters N and S. [2]

(ii) A small piece of unmagnetised iron is placed at A.

What, if anything, happens to it?

..... [1]

(iii) A small piece of positively charged plastic is placed at B.

What, if anything, happens to it?

..... [1]

(b) Fig. 9.2 shows an electromagnet.

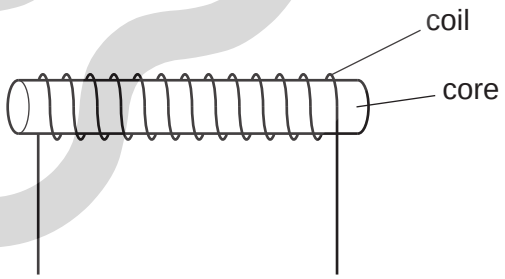

Fig. 9.2

(i) What must be done to magnetise the core?

..... [1]

(ii) Suggest the material from which the core should be made.

..... [1]

(iii) State one advantage of an electromagnet, compared with a magnet such as that in **(a)**.

..... [1]

[Total: 7]

© UCLES 2010
www.root19.com

+91 - 9969 353 391

10 A cruise ship is anchored in a harbour. The crew holds a party for the guests on board, and the ship's electrical department decorates the decks with strings of coloured lamps.

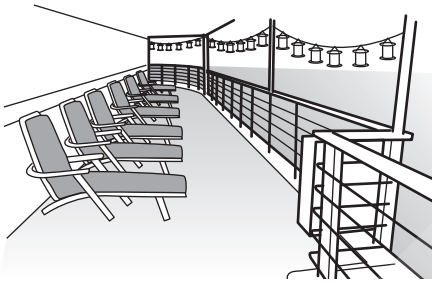

Fig. 10.1

Each string of lamps contains thirty 100 V lamps. The strings of lamps are run from a 100 V generator. The resistance of each lamp is 250 Ω. Ignore the resistance of the generator.

(a) State whether the lamps on a particular string are connected in series or in parallel.

..... [1]

(b) Calculate the current in each lamp when it is at normal brightness.

current = ... A [3]

(c) What current does the generator supply to each string of lamps?

current = ... A [1]

(d) The generator supplies current to several strings of lamps.

State whether the strings are connected to the generator in series or in parallel.

..... [1]

(e) One of the lamps "blows" and forms an open circuit.

What effect, if any, does this have on

(i) the other lamps in the same string, ...

(ii) the lamps in the other strings? ..... [2]

[Total: 8]

© UCLES 2010
www.root19.com

+91 - 9969 353 301

BLANK PAGE

© UCLES 2010
www.root19.com

+91 - 9969 353 391

11 The reed switch (reed relay) shown in Fig. 11.1 is a normally-closed one.

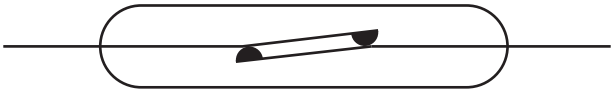

Fig. 11.1

When a magnet is held close to the reed switch, the contacts open, as shown in Fig. 11.2. Fig. 11.2 also includes the circuit symbol for a bell.

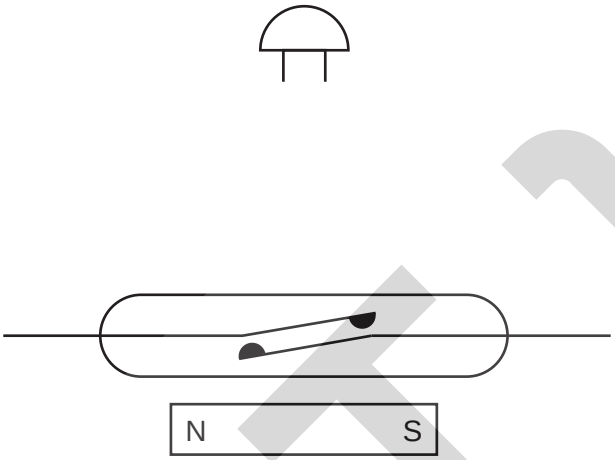

Fig. 11.2

(a) Complete Fig. 11.2 so that it shows a circuit that will cause the bell to ring when the magnet is taken away. [2]

(b) Fig. 11.3 shows a door in a wall.

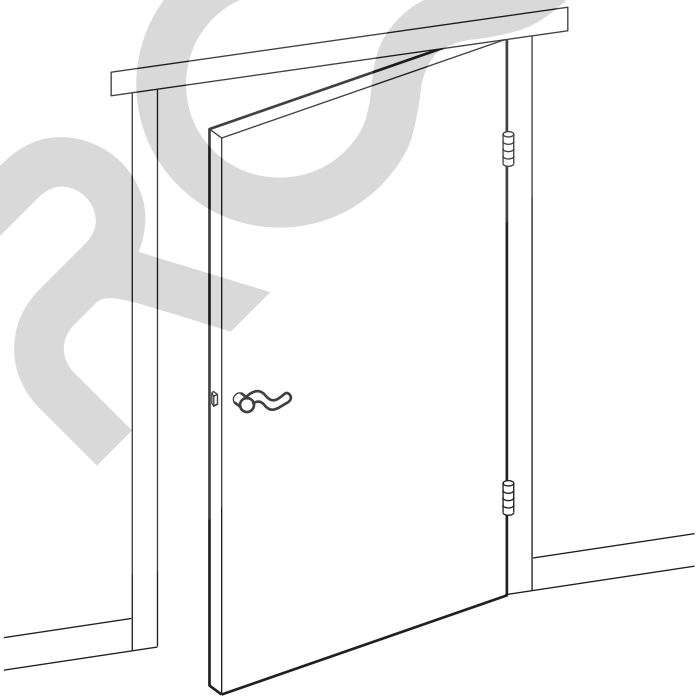

Fig. 11.3

(i) On Fig 11.3, show where you would fix the reed switch and the magnet of Fig 11.2, so that the bell rings when the door opens. Use the letter S for the switch and the letter M for the magnet. [2]

(ii) Suggest one application of this arrangement.

.....

.....

.....

..... [1]

[Total: 5]

www.root19.com +91 - 9969 353 301

12 The table below lists the three types of emission which can occur during radioactive decay.

(a) Complete the table to indicate whether each of the emissions has mass and whether it has charge. Three answers have been given to help you.

	mass	charge
alpha (α)	YES	
beta (β)		YES
gamma (γ)	NO	

[3]

(b) From which part of the atom do all of these emissions come?

..... [1]

(c) The values in the table below were obtained during the decay of a radioactive substance.

elapsed time / minutes	count rate / counts / min
0	909
20	689
40	522
60	400
80	300
100	230
120	170
140	125
160	99

(i) On Fig. 12.1, three points have been plotted for you.

Plot the remaining points, using dots in circles as shown, and draw the best-fit curve for these points. [3]

www.root19.com +91 - 9969 353 391

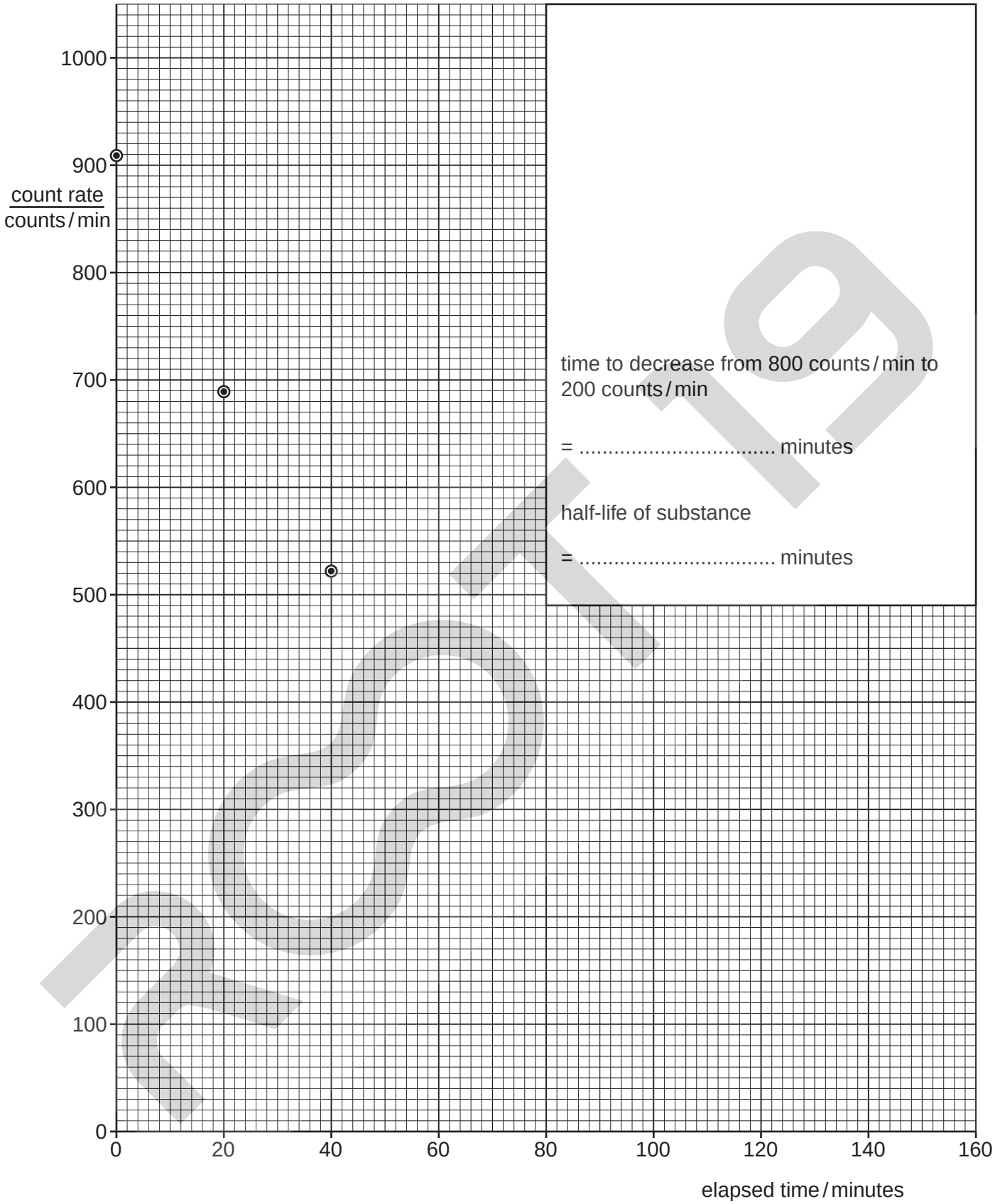

Fig. 12.1

www.root19.com +91 - 9969 35 35 01

(ii) From the graph, find the time taken for the count rate to decrease from 800 counts / min to 200 counts / min. Write your answer and any working in the space on the graph. [3]

(iii) Use your value from **(c)(ii)** to determine the half-life of the radioactive substance.

Write your answer in the space on the graph. [1]

(d) A different sample of the same radioactive substance as in **(c)** has an initial count rate of 4000 counts / min.

Write down the time taken for the count rate to decrease to 1000 counts / min.

..... [1]

[Total: 12]

© UCLES 2010
www.root19.com

+91 - 9969 353 391

BLANK PAGE

© UCLES 2010
www.root19.com

+91 - 9969 353 391

BLANK PAGE

Permission to reproduce items where third-party owned material protected by copyright is included has been sought and cleared where possible. Every reasonable effort has been made by the publisher (UCLES) to trace copyright holders, but if any items requiring clearance have unwittingly been included, the publisher will be pleased to make amends at the earliest possible opportunity.

University of Cambridge International Examinations is part of the Cambridge Assessment Group. Cambridge Assessment is the brand name of University of Cambridge Local Examinations Syndicate (UCLES), which is itself a department of the University of Cambridge.

www.root19.com +91 - 9969 353 391